Signature Checked

ELECTRICAL WORK

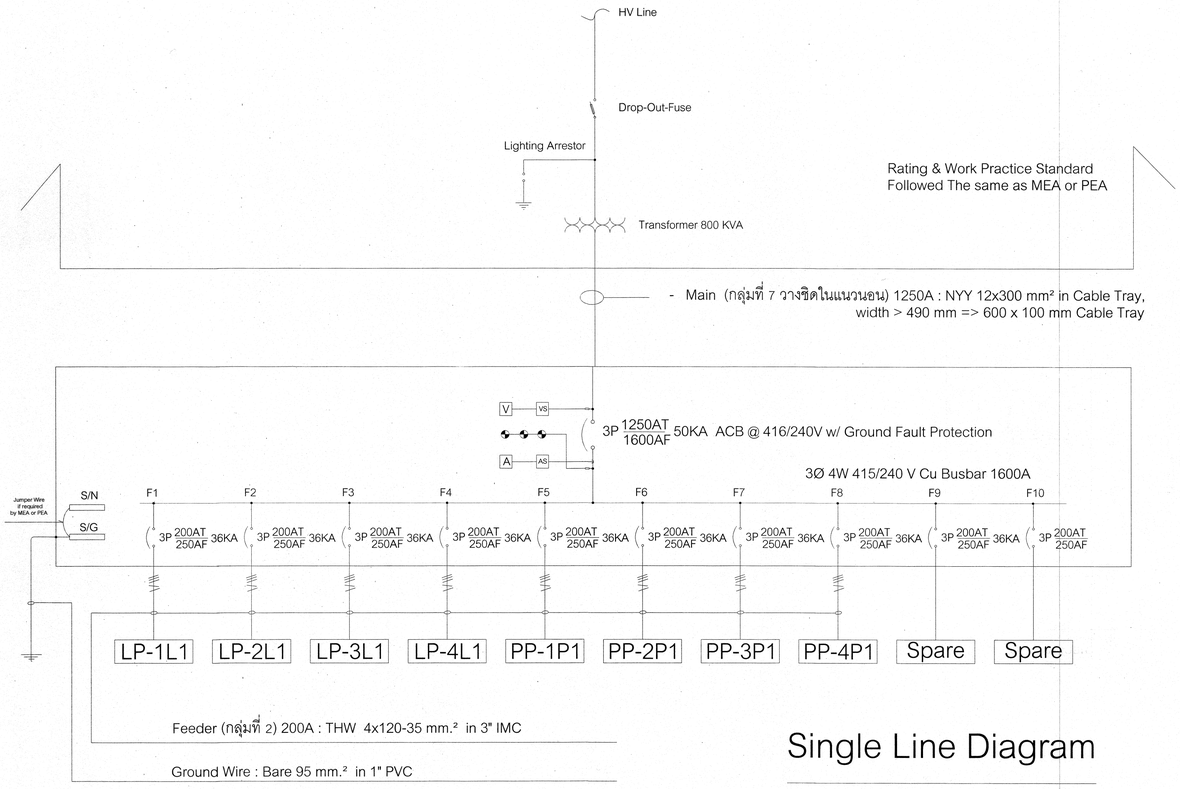

Single Line Diagram

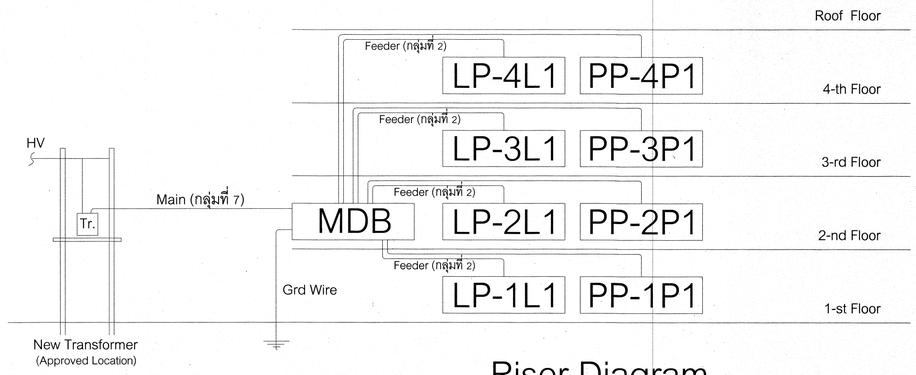

Riser Diagram

LEGEND

- LED Lighting Fixture 1x14 W, Approved Wall Light, Letter "a" indicates the swich controlling unit (Philips,Toshiba or Equal)
- LED Lighting Fixture 1x7 W, Down Light, Plastic Set Recessed mtg. in Ceiling or Surface mtg. under Slab, Letter "a" indicates the switch controlling unit (Philips,Toshiba or Equal)
- LED Lighting Fixture 1x18 W, Down Light, Plastic Set Recessed mtg. in Ceiling or Surface mtg. under Slab, Letter "a" indicates the switch controlling unit (Philips,Toshiba or Equal)
- LED Lighting Fixture 1x9 W, Supper Slim Batten Light, Surface mtg. Letter "a" indicates the switch controlling unit (Philips,Toshiba or Equal)
- LED Lighting Fixture 1x18 W, Supper Slim Batten Light, Surface mtg. Letter "a" indicates the switch controlling unit (Philips,Toshiba or Equal)
- Switch : Each Gang (a,b..n.) 1P 16A 250V in uPVC Box, (Panasonics or Equal) Letter "a" indicates the Lighting Unit controlled by the Switch
- Tree-way Switch : Each Gang (3) 1P 2T16A 250V in uPVC Box, (Panasonics or Equal) Letter "3" indicates the Lighting Unit controlled by the Switch from 2 position
- Receptacle : Universal Duplex 2P 16A 250V w/ Ground, in uPVC Box, (Panasonics or Equal)
- Enclosed circuit Breaker : 2P 30A 250V, in uPVC Box, (Panasonics or Equal)
- Wheather Proove uPVC Cover for Switch or Receptacle

- Wiring : THW 2x2.5 mm.² TIS 11-2553 in EMT
- Wiring : THW 2x2.5-2.5 mm.² TIS 11-2553 in EMT
- Wiring : THW nx2.5 mm.² TIS 11-2553 in EMT,(where n = number of Wire)
- Lighting Homerun : THW 2x4.0 mm.² TIS 11-2553 in EMT / WireWay
- Receptacle Homerun : THW 2x4.0-4.0 mm.² TIS 11-2553 in EMT / WireWay
- AirCondition Homerun : THW 2x6.0-6.0 mm.² TIS 11-2553 in EMT / WireWay
- Ground Rod : Copper-Clad Steel Ground Rod 5/8" Ø x 10' long or more as required (R < 5Ω)
- LP-mLn — Lighting Panel Board : LP-mLn,where
  L = Lighting Panel Board
  m = Floor Number
  n = Panel Number in m-th Floor
  (Installed as Specified or Approved Location
  See Detail in Load Schedule or in Details of Panelboard)
- PP-mPn — Power Panel Board : PP-mPn, where
  P = Power Panel Board
  m = Floor Number
  n = Panel Number in m-th Floor
  (Installed as Specified or Approved Location
  See Detail in Load Schedule or in Details of Panelboard)
- MDB — Main Distribution Board : MDB
  (Installed as Specified or Approved Location
  See Details in Single Line Diagram)

Details of Panel Board

Lighting Panel Board : (LP-1L1,LP-2L1,LP-3l1,LP-4L1)
48P 3Ph 4W 415/240V 250A BUSBAR
1-3P 200AT 250AF 25KA MCCB for Main Circuit Breaker
36-1P 16AT 63AF 6KA MCB for Ltgs,Recps,Spare
12-1P 32AT 63AF 6KA MCB for A/C,Spare

Power Panel Board : (PP-1P1,PP-2P1, PP-3P1,PP-4P1)
48P 3Ph 4W 415/240V 250A BUSBAR
1-3P 200AT 250AF 25KA MCCB for Main Circuit Breaker
36-1P 32AT 63AF 6KA MCB for A/C, Equipment, Spare
6-1P 40AT 63AF 6KA MCB for Equipment, Spare
2-3P 63AT 63AF 6KA MCB for Equipment,Spare

Load Estimated

Floor Load :
Effective Area : 960 m²
Effective Load : 177,600 VA = 246.67 A
Continuous Load : 308 A
IEC Load Step : 300 A => 200A + 200A
Building Load :
Effected Area : 960x4 = 3,840 m²
Effective Load : 710,400 VA = 1,030 A
Continuous Load : 1,288 A
IEC Load Step : 1,250 A
Transformer : 800 KVA @ 400/230V
Full Load Current (I_{FL}) : 1,159.40 A
Continuous Load Current : 1,449.28 A

เริ่มใช้ในปีงบประมาณ 2562

กลุ่มมาตรฐานอาคารและสิ่งก่อสร้าง สำนักอำนวยการ สำนักงานคณะกรรมการการอาชีวศึกษา กระทรวงศึกษาธิการ	แบบ: อาคารโรงฝึกงาน 4 ชั้น พื้นที่ 4,000 ตร.ม.		แผ่นที่: 49A04/62
	สถาปนิก	อรรณพ แก้วปทุมทิพย์ ว-สถ 492	แผ่นที่ E 1/6
		ตรวจ	
	วิศวกรไฟฟ้า	นิยม เหรียญสุวรรณ วฟก.463	รวม 315 แผ่น
		ตรวจ	
	เขียนแบบ	ณรงค์ จานวงศ์	วันที่ งปม:2562
	แบบแสดง	ระบบไฟฟ้า	ผู้อำนวยการ